wga
FOOD SERVICE EQUIPMENT

MINI

Mini MP

Mini MP 160 V.V. | Mini MP 190 V.V. | Mini MP 240 V.V.

For handling smaller quantities

2000 to 12 500 rpm

COMPACT

CMP

CMP 250 V.V. | CMP 300 V.V. | CMP 350 V.V.

15 litres | **30 litres** | **45 litres**

2300 to 9600 rpm

LARGE

MP Ultra

STAINLESS STEEL MOTOR BASE

New, even more ergonomic handle design

MP 350 Ultra | MP 450 Ultra | MP 550 Ultra | MP 600 Ultra

50 litres | **100 litres** | **200 litres** | **300 litres**

MP 350/MP 450 : 9500 rpm
MP 350 V.V./MP 450 V.V. : 1500 to 9000 rpm

9000 rpm

9500 rpm

For handling smaller quantities

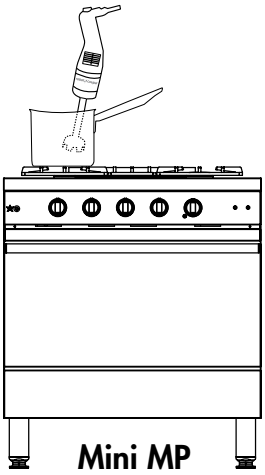

Mini MP

Special catering models - up to 45 litres

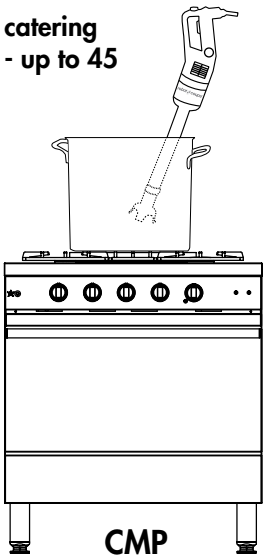

CMP

Specially designed / commercial catering

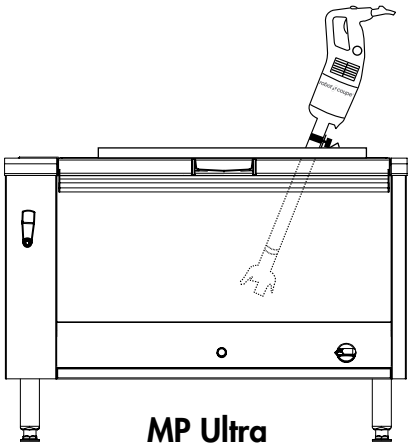

MP Ultra